How it works?

Rollout Unit

Air Flow Thru

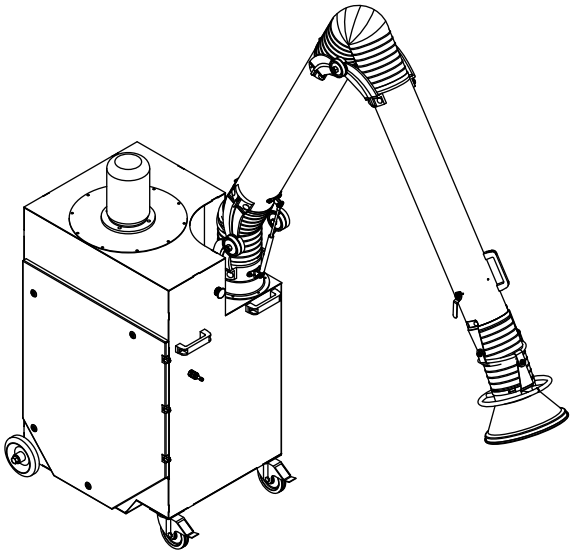

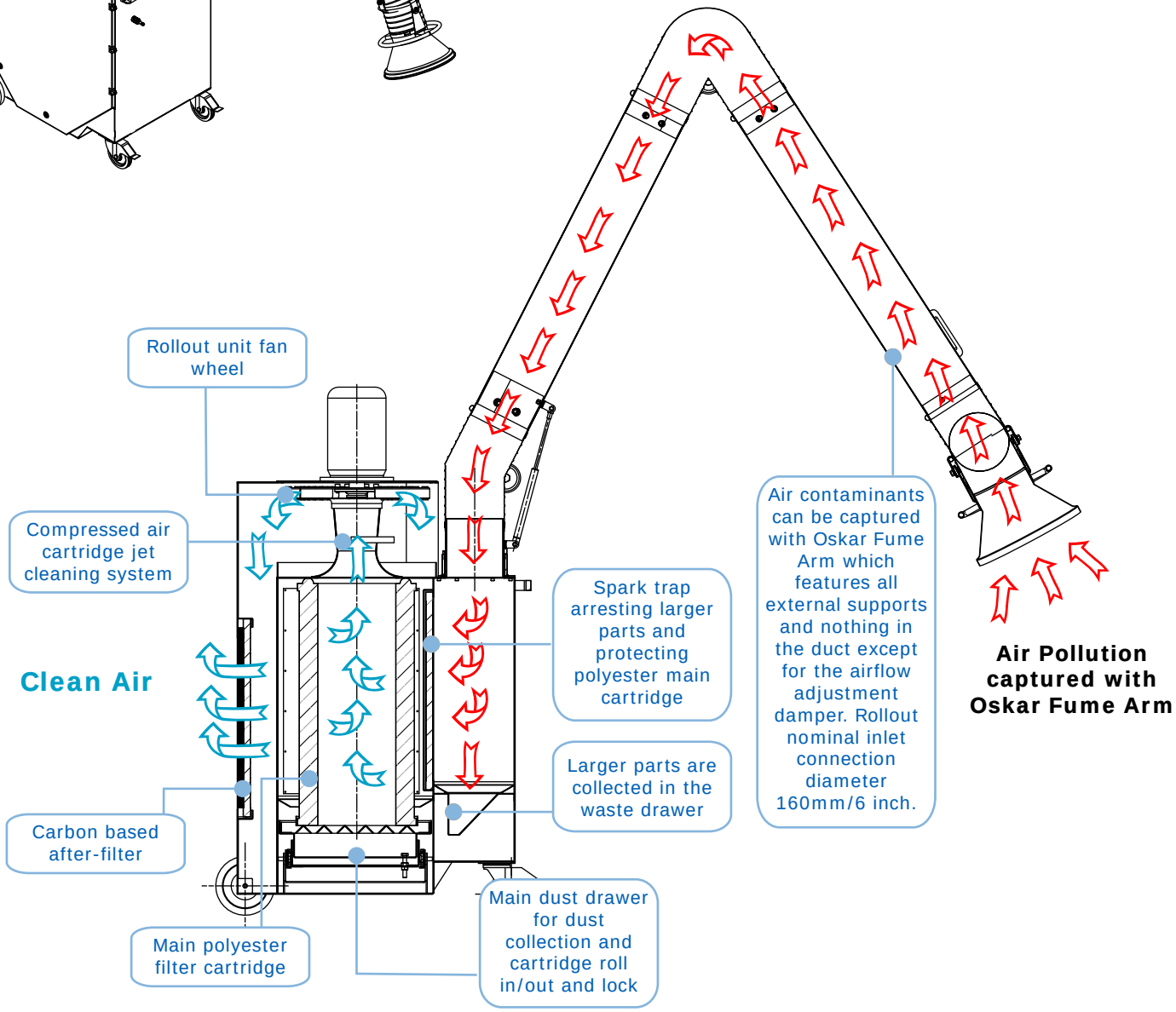

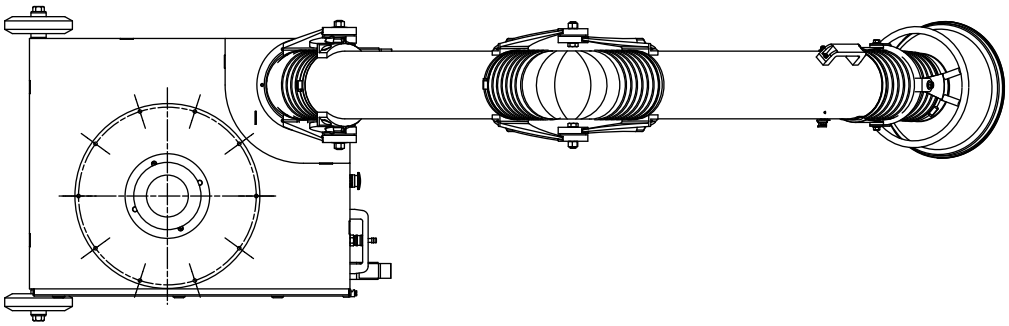

This drawing is copyright protected and remains the property of Oskar International Polska Sp. z.o.o.
Oskar Air Products reserves the right to make design changes without notice. www.oskarairproducts.com